IBRA International Bone Research Association

Program

IBRA EDUCATION PROGRAM
Advanced
Recommended for senior surgeons and physicians in private practice

IBRA Seminar and Workshop

Acute and Chronic Lesions of the Upper Limb

June 8 – 9, 2018
São Paulo, Brazil

Chairman:
Prof. Rames Mattar jr., São Paulo, BR

Foreword

Dear Colleagues and Friends

This seminar will review basic principles and new frontiers of Upper Limb Reconstructive Surgery. Trauma and musculoskeletal system injuries should be considered an epidemic disease in our area, particularly in large cities.
New developments in the field of surgical procedures and the clinical experience of renowned surgeons will be presented and discussed in this two-day course.

It is therefore my pleasure to invite you to the IBRA Seminar and Workshop „Acute and Chronic Lesions of the Upper Limb", which will be held in São Paulo, Brazil, June 08 – 09. During the Sessions of hand, wrist and elbow trauma, we will discuss the state of the art in bone fixation, ligament reconstruction and soft tissue management. The course will also provide Practical Training Sessions in the anatomy room of the Faculty of Medicine of the University of São Paulo.

The city of São Paulo offers a variety of top cultural and social venues that are worth to be combined with the seminar. I hope you can join us.

Prof. Dr.
Rames Mattar jr.

Faculty

Chairman

Prof. Dr. Rames Mattar jr., São Paulo, BR

Faculty (in alphabetical order)

Dr. Fernado Brandao de Andrade e Silva, São Paulo, BR
Dr. Edgard N. França Bisneto, São Paulo, BR
Dr. Ivan Chakkour, São Paulo, BR
Dr. Scott Edwards, Phoenix, USA
Dr. Aldo Falco, Buenos Aires, ARG
Dr. Flavio Faloppa, São Paulo, BR
Dr. Radek Kebrle, Vysoké nad Jizerou, CZ
Prof. Dr. Rames Mattar jr., São Paulo, BR
Dr. Tiago G. M. Mattar, São Paulo, BR
Dr. Arnaldo Amado Ferreira Neto, São Paulo, BR
Dr. Marcelo Rosa de Rezende, São Paulo, BR
Dr. Antonio Tufi, Belo Horizonte, BR
Dr. Eduardo Vasquez, Rio de Janeiro, BR

Friday – June 8, 2018

7:45 am	**Departure from Hotel Mercure to FMUSP**	
8:00 – 8:30 am	**Registration**	
8:30 – 8:40	Welcome	*R. Mattar jr.*
8:40 – 8:45	IBRA Introduction	*J. M. Vázquez*
8:45 – 10:15 am	**Session I: Scaphoid (90min)**	***R. Mattar***
8:45 – 9:00	Treatment Strategies in Acute Scaphoid Fracture	*E. N. F. Bisneto*
9:00 – 9:15	Scaphoid Nonunion	*R. Mattar jr.*
9:15– 9:30	Indication for Scaphoid Plate	*S. Edwards*
9:30– 9:45	SNAC Wrist: Salvage Procedures	*R. Kebrle*
9:45 – 10:15	Discussion and Cases Cases: E. N .F. Bisneto	*All*
10:15 – 10:45 am	**Coffee Break**	

Friday – June 8, 2018

10:45 – 12:30 pm	**Session II: Distal Radius (105min)**	***R. Kebrle***
10:45 – 11:00	Current Treatment in Distal Radius Fractures	*I. Chakkour*
11:00 – 11:15	Troublesome Lunate Facet – Plate Selection or Fragment Specific	*R. Kebrle*
11:15 – 11:30	Ulnar Shortening	*E. Vasquez*
11:30 – 11:45	Correction Osteotomy of the Distal Radius	*A. Falco*
11:45 – 12:30	Discussion and Cases Cases: T. G. M. Mattar	*All*
12:30 – 1:30 pm	**Lunch**	

Friday – June 8, 2018

1:30 – 3:00 pm	**Session III: Salvage Procedures in the Wrist (105min)**	***F. Faloppa***
1:30 – 1:45	Salvaging the Arthrothic DRUJ	*R. Kebrle*
1:45 – 2:00	RSL Fusion	*R. Mattar jr.*
2:00 – 2:15	Total Wrist Fusion	*F. Faloppa*
2:15 – 3:00	Discussion and Cases Cases: M. R. de Rezende	*All*
3:00 - 3:30 pm	**Coffee Break**	

Friday – June 8, 2018

3:30 – 5:30 pm	**Session IV: Elbow (120min)**	***S. Edwards***
3:30 – 3:45	Distal Humerus Fractures	*F. Brandao*
3:45 – 4:00	Olecranon Fractures	*S. Edwards*
4:00 – 4:15	Coronoid Fractures	*E. Vasquez*
4:15 – 4:30	Radial Head Fractures	*A. Tufi*
4:30 – 4:45	Terrible Triad Injuries	*A. A. F. Neto*
4:45 – 5:30	Discussion and Cases Cases: A. A. F. Neto	*All*

7:45 pm	**Departure from Hotel Mercure to Bovinu´s Restaurant**
8:00 pm	**Social Dinner at Bovinu´s Restaurant**

Saturday – June 9, 2018

7:30 am	**Departure to Laboratory at FMUSP**	
7:45 – 8:10	**Registration at FMUSP**	
8:10 am – 2:00 pm	**LABS (285min)**	
8:10 – 8:15	Product Introduction	*Medartis*
8:15 – 9:00	Lab 1: Olecranon Fracture	*S. Edwards*
9:00 – 9:45	Lab 2: Radial Head Fracture	*A. Tufi*
9:45 – 10:00 am	**Coffee Break**	
10:00 – 10:45	Lab 3: Distal Radius Fracture (FPL and Hook Plate)	*R. Kebrle*
10:45 – 11:45	Lab 4: Distal Radius Fracture (Dorsal Radius Plate)	*I. Chakkour*
11:45 – 12:30	Lab 5: Scaphoid Fractures (dorsal and volar approach)	*E. N. F. Bisneto*
12:30 – 1:15 pm	Lab 6: Scaphoid Plating	*R. Mattar jr.*
1:15 – 2:00	Lab 7: 4 Corner Fusion	*F. Faloppa*
2:00 – 2:30 pm	**Light Lunch**	
2:30 pm	**Adjourn and Departure to Hotel Mercure**	

General Information

Chairman

Prof. Dr. Rames Mattar jr., São Paulo, BR

Organized by

International Bone Research Association - IBRA Basel / Switzerland

Registration & Information

IBRA Administration Office
Hochbergerstrasse 60E, CH-4057 Basel
Phone: +41 (0)61 319 05 05, Fax: +41 (0)61 319 05 19
info@ibra.ch, website: www.ibra.ch

Registration Fees

	Seminar & Workshop	Seminar only
IBRA Member	USD 570	USD 90
Non-Member	USD 670	USD 130
Resident	USD 620	USD 110
Students	-	USD 50

Registration Deadline

May 25, 2018

General Information

Educational hours

Theoretical Part on Friday, June 8 - 405 min
Practical Part on Saturday June 9 - 285 min

Total: 11,5h

Target audience

Recommended for head of departments and senior surgeons

Main specialty of the event

Starting with classification of the injury or deformity, the faculty members share their preferred approach, treatment, and follow-up of cases with advanced difficulty.

Expected total number of participants

Seminar 100
Workshop 30

Educational needs

Dealing with challenging fractures and deformities, consultants request exchange through case discussions both theoretically and through surgeries. Beside state-of-the-art approaches, expert opionions and discussions are highly appreciated to scientifically elaborate improvements when dealing with difficult cases.

Expected educational outcomes

Extend common knowledge and skills and awareness of surgical techiques by exchanging less frequent or demanding cases of orthopedics and traumatology.

General Information

Clear description of the nature of the event

Challenging cases are introduced in lectures and contrain case discussions. After that, a cad lab workshop follows theoretical sessions. Each approach is usually explained by a corresponding educational video explained by a faculty member.

Methods to promote active learning

Multimedia presentations; time for question & answer sessions and discussion; cadaver workshop with tips & tricks shown by faculty members.

International audience

Yes

Main language of the event

The official congress languages are Portuguese and English.

Simultaneous translation

Simultaneous translation will be provided.

General Information

Meeting Venue for Seminar and Workshop

Faculdade de Medicina da Universidade de São Paulo (FMUSP)

Av. Doutor Arnaldo, 455
Cerqueira César, São Paulo, SP
CEP: 01246-903
Brazil

Tel. Nr. +55 11 3061-7000

General Information

How to get there

If arriving by car, please park:

Dr. Eneas de Carvalho Aguiar Avenue, 260
Tel. +55 11 2141 6677

If arriving by Subway, use the subway (Metró) L2 (green line) to "Clinicas" Station

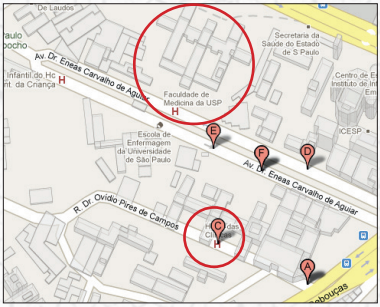

General Information

Hotel Accomodation

Mercure São Paulo Pinheiros Hotel
Rua Capote Valente 500 - Pinheiros
05409000 São Paulo - Brazil
Phone. : (+55)11 30694000 -
Fax : (+55)11 30694047
E-Mail : h3147-re1@accor.com.br

Standard Single Room: R$ 290.00
Standard Double Room: R$ 350.00

Additional Taxes:
5% of ISS (per day/per room)
R$ 4,45 of optional tourism tax (per day/per room)

Hotel reservation is the responsibility of the participants can be made by calling the hotel directly at +55 11 3069-4049
(Use booking code **"IBRA"**)

General Information

Social Dinner

Bovinu's Restaurant
Av. Rebouças, 1604
Jardim Paulista
São Paulo , SP
CEP: 05401-000

Sponsoring

We thank our major industry partner Medartis for contributing in-kind support (material and logistics) and for providing an unrestricted educational grant for this event.

medartis®

General Information

Method of Payment

The following methods of payment are accepted:

Credit Card VISA Master Card American Express

Bank Transfer (USD)	Bank Sarasin & Cie AG, CH-4002 Basel
Account no.	6010055.4002
IBAN no.	CH87 0875 0060 1005 5400 2
Clearing no.	8750
SWIFT	SARACHBB

Payment

All payments must be addressed to IBRA Administration Office, indicating the keyword **"São Paulo 2018"** and state the participant's name clearly (to identify your payment). Please ensure that the participant covers all transfer/bank charges.

Refund Policy

All refunds must be requested in writing to the IBRA Adminstration Office. If written notification is received 3 weeks prior to the event, a full refund less a USD 40 processing fee will be given. If written notification is received 10 days prior to the event, a refund of 50% of the registration fee will be given. For later notifications, there will be no refunds. Refunds will not be given for non-attendance.

IBRA International Bone Research Association

IBRA is a financially independent, internationally oriented non-profit organization, for specialized clinicians and research scientists. IBRA's core activity is the future-oriented advancement of bone-tissue research and management focusing particularly on:

- Bone biology, including osteointegration, bone generation and soft tissue reaction
- Maxillofacial and orthopaedic rehabilitation
- Materials research including hardware development
- Biomechanics
- Tissue engineering
- Surgical procedures & clinical management

IBRA encourages the development of innovative solutions in a friendly, loyal atmosphere. Future-oriented open-mindedness and international acceptance form the basis for first-rate assistance in realizing modern research projects and promoting individual careers. As an international forum reaching across geographic and cultural borders, IBRA offers an up-to-date network for the exchange of experience and knowledge in applied bone and tissue research.

History

IBRA was founded in Zurich, Switzerland on September 25, 2004 at the initiative of eighteen forward-looking clinicians. Its primary aims are the exchange of professional knowledge, promotion of new scientific developments, engineering of the musculoskeletal system, coordinated multi-centre research and highly specialized advanced training.

Research Support

IBRA offers financial support for research projects dealing with bone biology and the improvement or development of internal fixation devices for maxillofacial and limbs surgery. With the emphasis on innovation and suitability for practical application, 95% of the research budget goes towards applied research and clinical studies and 5% towards basic research.

Education

IBRA's education area offers clinicians special courses on the application of specific methods of treatment. IBRA's particular concern is to train tomorrow's highly qualified research scientists. IBRA enhances its members' qualifications through a scholarship program.

Notes

medartis®

PRECISION IN FIXATION

APTUS®
Ulna Shortening System 2.5

Rotation-proof with guided compression

Precise and finely adjustable saw guide (2 – 8 mm)

Controlled compression by using the spindle

Osteotomy performed with the plate in position due to a recess on the plate

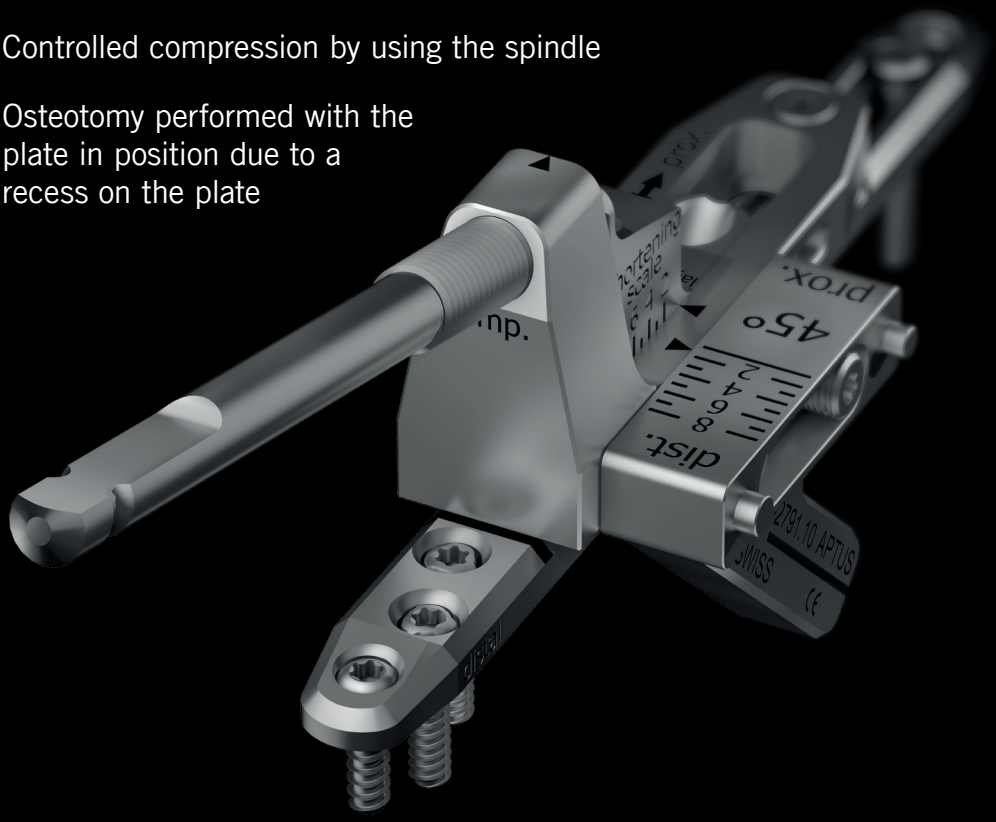

www.medartis.com

IBRA
International Bone Research Association

Hochbergerstrasse 60E
CH-4057 Basel
Phone +41 61 319 05 05
Fax +41 61 319 05 19
info@ibra.ch
www.ibra.ch